CUTTER C5

Fig. 2
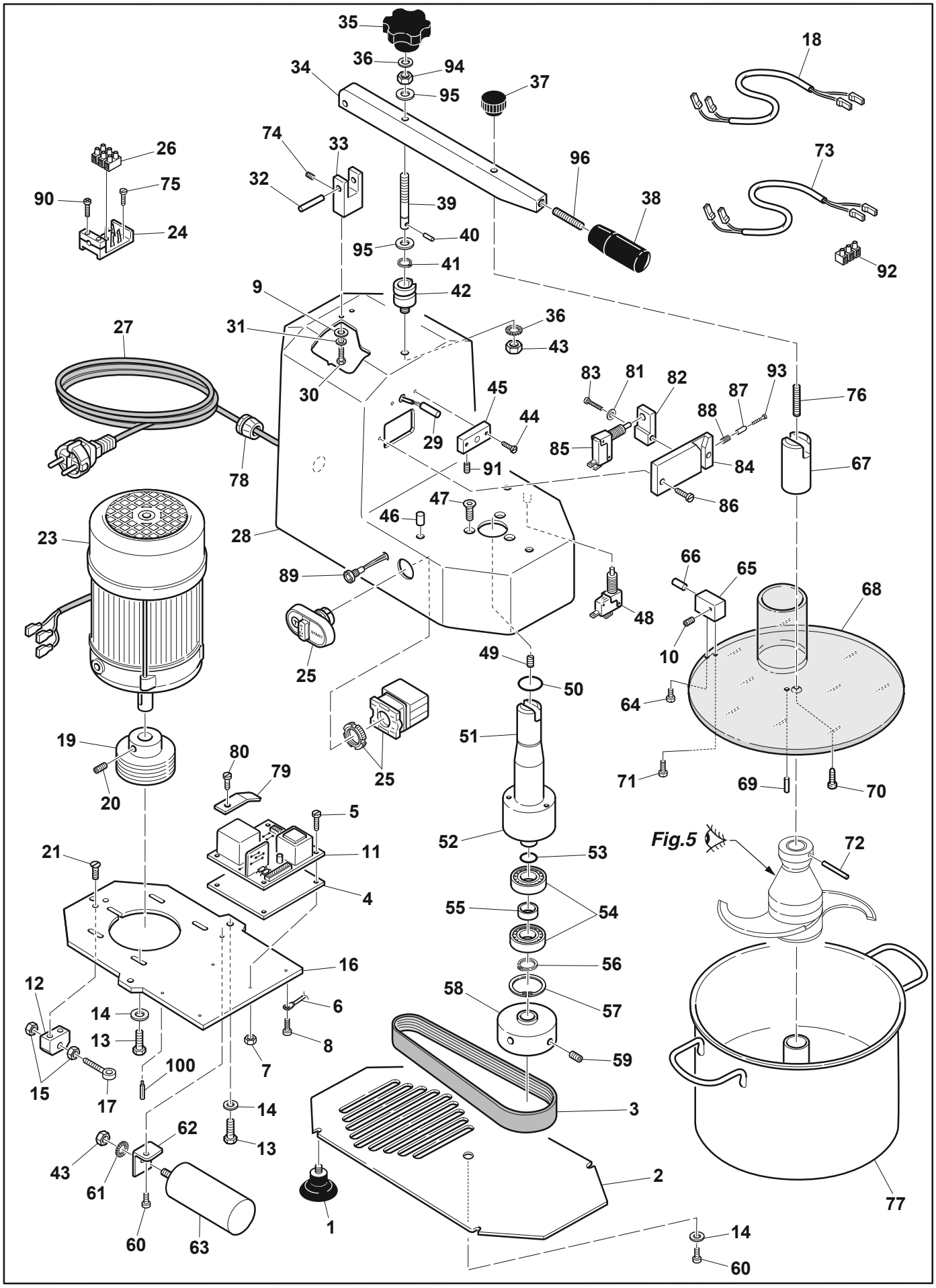
Ed. 09/2013