CUTTER C3

Fig. 1
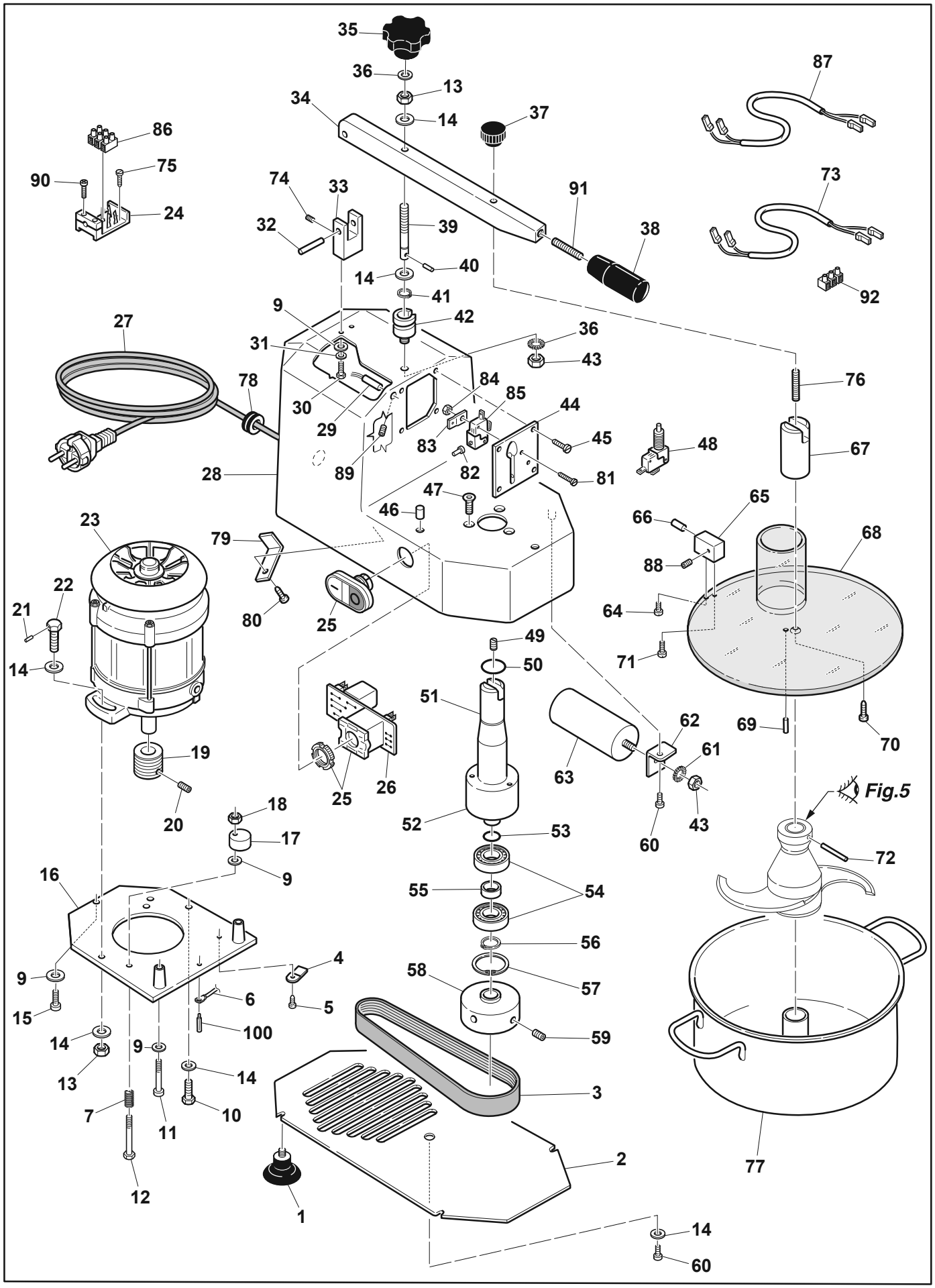
Ed. 09/2013